GRAFIX TEMPLATE @ 100%

* PLEASE FOLLOW PRINT FORMAT GUIDE ENCLOSED

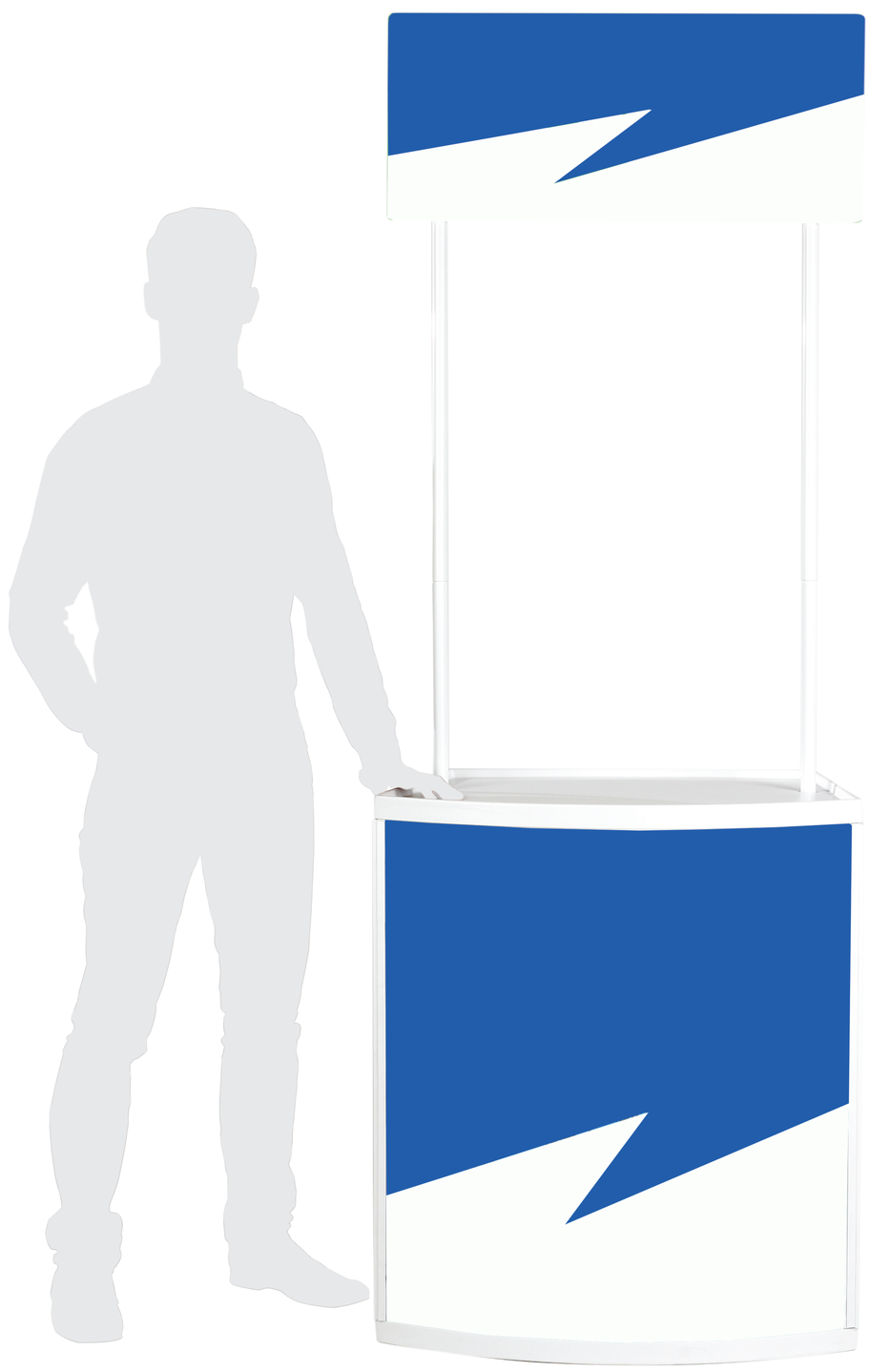

Print Artwork Specifications
We advise that artwork is only generated in the following design programs: Illustrator, Indesign
Artwork to be saved as PDF at 100% scale
Please use the template below for reference,
Submit two files,
(i) to be sent at 100% without template
(ii) to be sent with template laid over artwork

Fonts
Please ensure all fonts used (both screen and printer fonts) are included. Where possible convert fonts to paths /outlines, particularly for PC generated files.

Logos
Any logos should be created in Illustrator or Freehand, as a vector format for best quality.

Photographic Images
For images to be reproduced, without pixilation, a minimum resolution of 200 dpi at full size is required.

Artwork size
Please ensure that the artwork is sized to the viewable area with any necessary bleed extending out to the overall size.
To be produced at 100% scale. Artwork to be saved without crop marks.

File size
If possible keep the file size below 10MB uncompressed.

IMPORTANT
Colours may vary depending on artwork supplied. Lead times quoted from receipt of artwork. Any amendments may be charged for if proofs are required.

GRAFIX TEMPLATE @ 100%

- Graphic image/logo safe site area
- Removable Graphic image area
- Full Bleed area 40mm
- Non printable area
- Allow for fold on top side of panel 1mm gap

HEADER

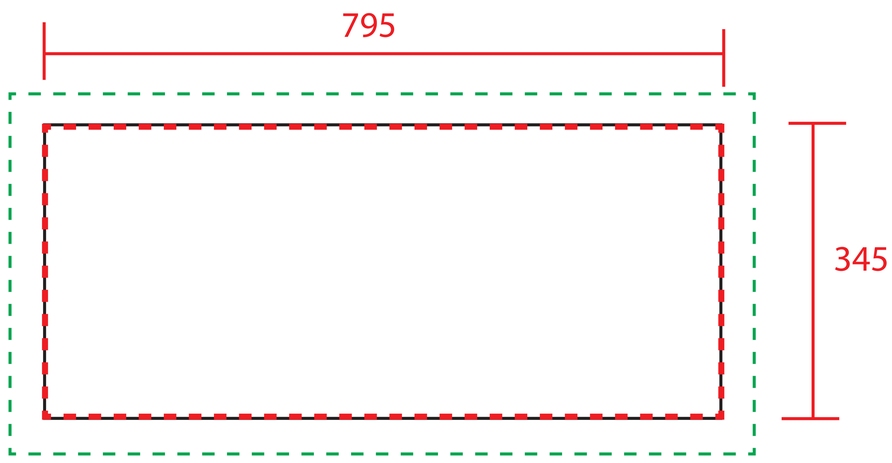

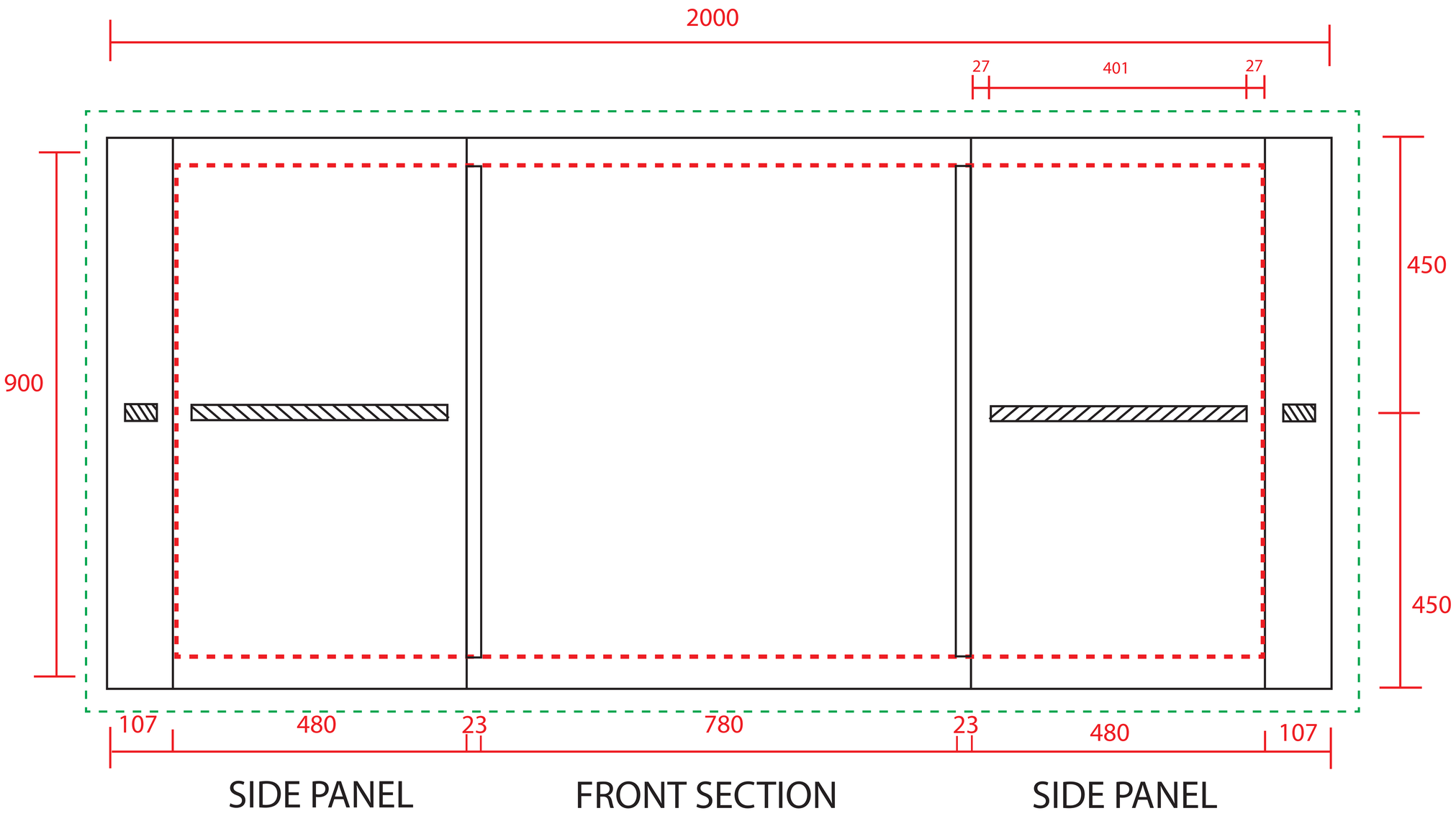
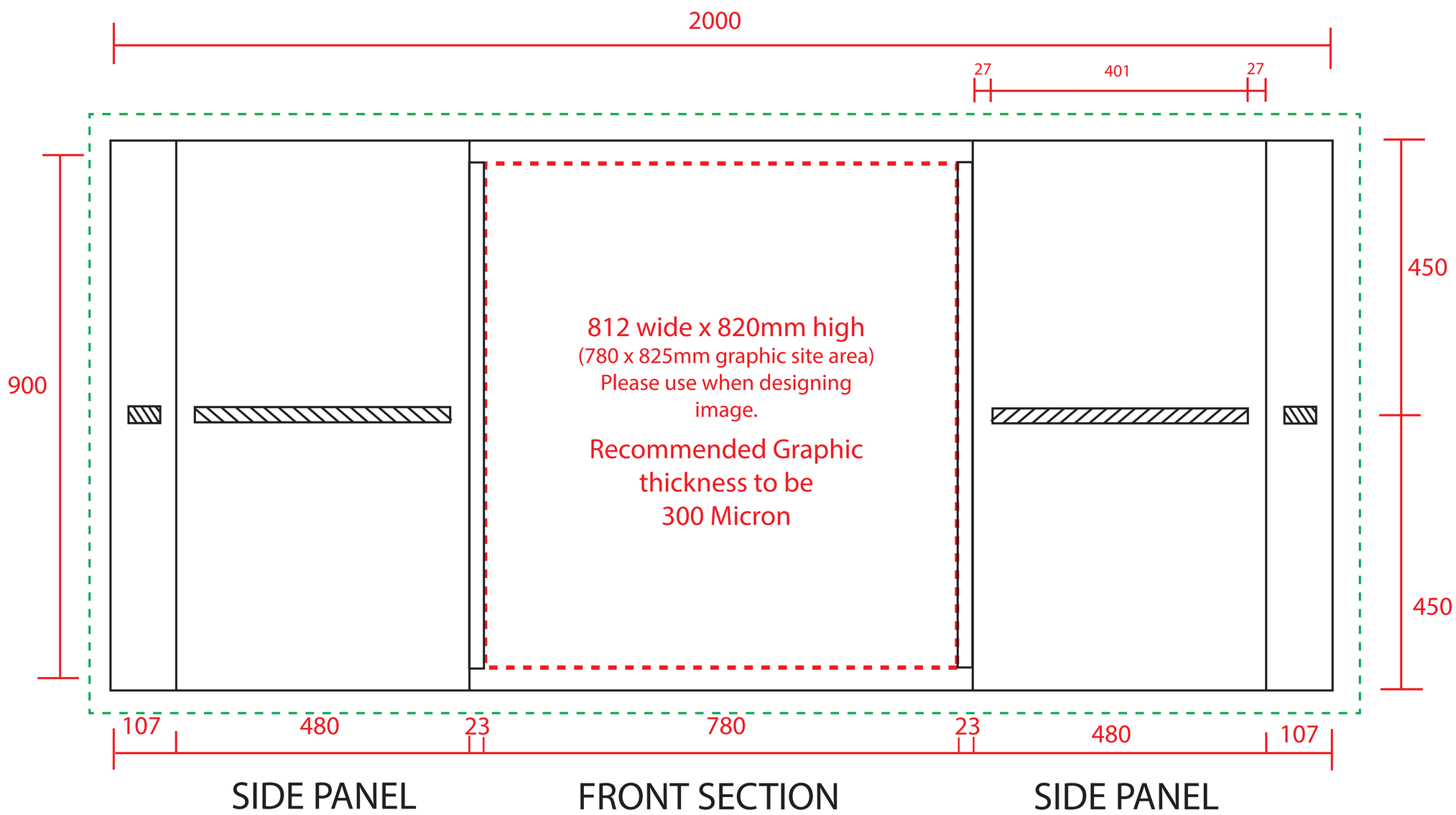
REMOVABLE GRAPHIC TEMPLATE